Notably unnoticeable.

d&b audiotechnik

Great sound needs only a little space.

The 44S is the first flush mountable loudspeaker from d&b. Being a d&b loudspeaker, it includes a few more clever design tricks to enable you to provide exceptional quality sound for your audience. It's the perfect loudspeaker for situations where the need for more sound is apparent, but the space available is an issue.
Custom solution options, horizontal and vertical positioning, a host of hardware accessories including an optional back box all serve to make the 44S as inconspicuous as possible, easily integrating into permanent installations as well as its surroundings.

A professional high-performance compact loudspeaker that can fit comfortably in the tightest of spaces, the 44S is ideal for corporate environments, cruise ships, and more.

Versatile performance beyond measure.

At an unassuming 128mm tall, the 44S can be placed where most loudspeakers can't: balconies, stage lips, trade show booths and stairs – even flush mounted in ceiling, walls and soffits using the optional back box.

An intelligent waveguide and baffle design creates a very smooth horizontal dispersion down to the lower frequencies while being tightly focused vertically. The 90° x 30° dispersion pattern keeps sound directed exactly where it should be.

The 44S is also ideal as a compact sound system in its own right when paired with the Bi8 subwoofer. Naturally, it also excels at nearfield and fill applications. Joining the established d&b xS-Series, the 44S pairs equally well with the established d&b xC- and E-Series cabinets.

Completely fills gaps, without filling the room.

The 44S was engineered to be as visually unnoticeable as possible. That doesn't mean it hides away quietly. Paired with the 30D installation amplifier the 44S claims an exceptionally high performance to size ratio. Importantly, its powerful 123dB output is tightly focused in a 90° x 30° dispersion pattern keeping sound directed exactly where it should be and no further.

A variety of accessories allows you to mount the 44S to walls, floors, and under ceilings or balconies or mount on a stand. Target coverage gaps precisely with a single loudspeaker or in closely coupled clusters of two cabinets.

An asymmetric cabinet design and the optional back box supplies additional flexibility that allows adjustments of +/- 20° in 5° increments for further precision in accommodating different listening heights. A rotatable waveguide extends this to both horizontal and vertical positioning.

Designed to draw listeners in.

Loudspeakers should support a performance, not distract from it. The 44S features a smooth high frequency response for dedicated nearfield applications, up to 17 kHz. A powerful midrange supports energetic vocal performances with high speech intelligibility and linearity. At the lower end, the 44S extends down to 90Hz. Not only have we designed the 44S to fit just about anywhere, we've ensured it is a joy to listen to – even up close.

Hanging out.
Whether it's a ceiling, balcony or wall the 44S can hang under most surfaces and out of sight. But with a performance of 123 dB, you'll hear it even if you can't see it. More directive than existing compact d&b loudspeakers, the 44S keeps sound where you want it without distracting from the event. Custom solutions options can provide even more camouflage, for aesthetically sensitive spaces.

Typical applications.

Ready to fly.
Designed with nearfield applications in mind, the 44S can nevertheless be used as a system in its own right. Pair the 44S with Bi8, 12S-SUB or E12X-SUB subwoofers for additional low frequency content or place them all around the venue to create a compact Soundscape system. The 44S can be hung from trusses, pole mounted or flown. It provides all the sound you need, but easily fits in the space that you have.

Double up.
The 44S is highly directive, but you aren't limited to using a single loudspeaker per location. A clever waveguide and baffle design minimize interference between loudspeakers, and of course there are a great many more hardware accessories to extract as much versatility out of such a small loudspeaker as possible.

Level off.
With the optional back box, the 44S disappears completely into stairs, walls, stages and ceilings. When the 44S can't be flush mounted, it can still keep views clear and audiences enthralled with excellent high frequency reproduction and an emphasis on intelligibility in the vocal range.

Think inside the box.

Constraint is a positive force for innovation. We've built a little bit more freedom into the 44S by pairing an asymmetrical cabinet design with an optional back box, giving you +/- 20° of adjustment in 5° increments.

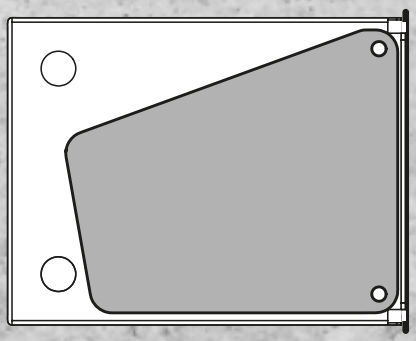

0°

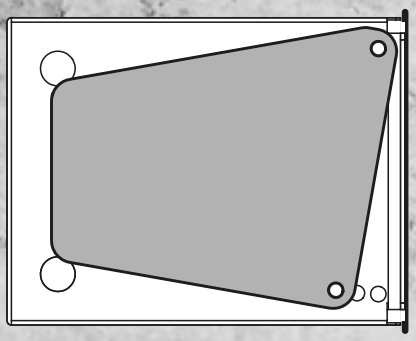

-10°

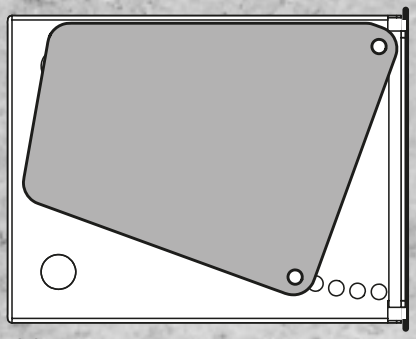

-20°

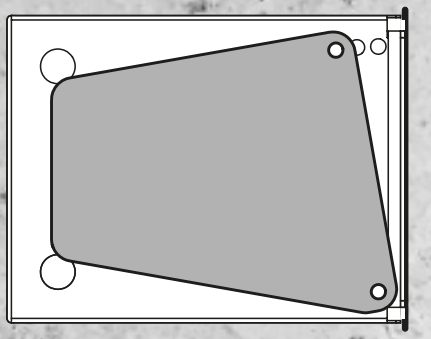

+10°

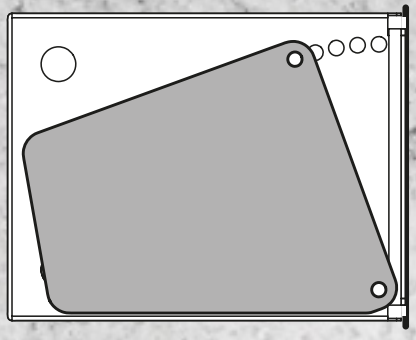

+20°

Think outside the box.

An accessory for every occasion? Well, yes that's important when one loudspeaker can play several different roles. For every setup option the 44S provides, there's a metal to match.

Mounting bracket

L-Mount adapter

Cluster bracket

Swivel bracket

Notably
unnoticeable.

	44S	
System Data		
Frequency response (–5 dB standard)	90 Hz - 17 kHz	
Frequency response (–5 dB CUT mode)	150 Hz - 17 kHz	
Max. sound pressure (1 m, free field)[1]		
with D80/D20/30D/40D	123 dB	
with D6/10D	121 dB	
Loudspeaker	Passive 2-way loudspeaker	
Nominal impedance	16 ohms	
Power handling capacity (RMS/peak 10 ms)	150/ 500W	
Dispersion angle (h x v)	90°x 30°	
Components	2 x 4,5" neodymium drivers	
	2 x 1.25" dome tweeter (rotatable horn)	
Connections	4-pin Phoenix Euroblock and 2 x NL4 M	
Pin assignment	Phoenix: 1: + / 2: – / 3: + / 4: –	
	NL4 M: 1+/1–	
Dimensions mm (H x W x D)	128 x 390 x 150	
Dimensions inch (H x W x D)	5 x 15,3 x 5,9	
Dimensions Backbox mm (H x W xD)		140 x 480 x 180
Dimensions Backbox inch (H x W xD)		5.5 x 18.9 x 7.1
Weight	3.6 kg (8 lb)	
Weight Backbox with loudspeaker		6.2 kg (13.7 lb)

[1]SPLmax peak, pink noise test signal with crest factor of 4

D00045.EN.01 (09/2020) © d&b audiotechnik GmbH & Co. KG

dbaudio.com

d&b audiotechnik®